Public

Grid Code Development Forum

4 December 2024

NESO
National Energy System Operator

Agenda

1	Introduction, meeting objectives and review of previous actions - **Claire Newton, NESO**
2	Modelling requirements for co-located sites - **Tanmay Kadam, NESO**
3	Extension of user model submission for Analysis & Modelling to support operationally critical system for ENCC - **Jarzinho Rapoz , NESO**
4	Obligatory Reactive Power Service (ORPS) methodology review - **Jeremy Taylor, NESO**
5	AOB and Meeting Close - **Claire Newton, NESO**

NESO National Energy System Operator

GCDF – Objectives and Expectations

Objective
Develop ideas, understand impacts to industry and modification content discussion, in relation to Grid Code related issues.
Anyone can bring an agenda item (not just NESO!)

Expectations
Explain acronyms and context of the update or change
Be respectful of each other's opinions and polite when providing feedback and asking questions
Contribute to the discussion
Language and Conduct to be consistent with the values of equality and diversity
Keep to agreed scope

The Forum will be recorded and made available on the GCDF webpage along with summary notes.

NESO National Energy System Operator

Review of Previous Actions

ID	Month	Description	Owner	Notes	Target Date	Status
1. Demand Control Rotation Protocol	November '24	• NESO to liaise with Electricity Task Group (ETG) and ensure any Distribution Code impacts are considered alongside the Grid Code modification. • NESO should cross-check the proposed changes with the capacity market rules to ensure consistency	NESO	Verbal update in December GCDF	4th December 2024	Ongoing
2. System incidents Reporting	November '24	• NESO to liaise with Statkraft to determine next steps	NESO	Follow up meeting between NESO and Statkraft has been scheduled to take place on 16th December 2024	10th November 2024	Complete

Public

Modelling Requirements for Co-located Sites

NESO
National Energy System Operator

Modelling Requirements for Co-located Sites

Examples of Co-located Sites of Interest:

1. A GB Code User intending to install additional Power Generating Modules of new technology behind the existing Grid Entry Point
2. An EU Code User (pre-1st Sept. 2022) intending to install additional Power Generating Modules of new technology behind the existing Grid Entry Point

Grid Code Modelling Requirement:

- PC.A.5.4.2 (g) (i): For any **Power Park Unit**s in a **Power Park Module** with a **Completion Date** after 1 September 2022 and any **Power Park Units** and/or **Power Park Module(s)** subject to a control system change and/or a **Modification** to any **Plant** or **Apparatus** after 1 September 2022, control system models in accordance with PC.A.9 should be supplied covering the full information required under PC.A.5.4.2 (a), (b), (c), (d), (e) and (f).

Modification:

- Any actual or proposed replacement, renovation, modification, alteration or construction by or on behalf of a **User** or **The Company** to either that **User's Plant** or **Apparatus** or **Transmission Plant** or **Apparatus**, as the case may be, or the manner of its operation which has or may have a **Material Effect** on **The Company** or a **User**, as the case may be, at a particular **Connection Site.**

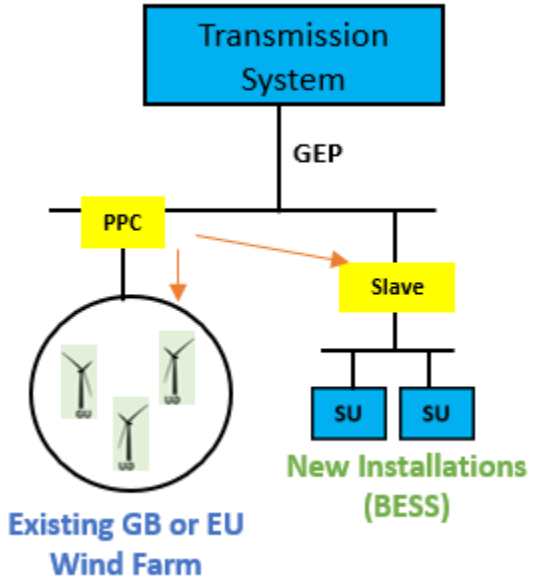

The existing PPC would be modified to also use the reactive power capability available from new installations

NESO
National Energy System Operator

Modelling Requirements for Co-located Sites

- The term 'Control System Change' constitutes any changes to the control function block diagrams and/or system architecture, including input and output signals. This also includes changes to the generator control (control system associated with Main Plant and Apparatus), reactive power compensation equipment control and the power park controllers (PPC)
- A parameter change (gain or time constant) will not invoke any new modelling requirements in line with PC.A.9; however, any such change(s) shall be discussed and agreed with The Company
  - For the avoidance of doubt, Generators connected after 1st September 2022, or which have been subject to a control system change, modification or parameter change shall supply updated models (RMS and EMT) of their Plant and Apparatus to The Company in accordance with the requirements of PC.A.9. Other Generators connected before 1st September 2022 shall supply updated control system data of their Plant and Apparatus to The Company*
  - In both the cases, Generators shall ensure that the models or data supplied in respect of their Plant and Apparatus accurately reflect the behaviour of the 'as built' plant, as required under PC.A.5.3.2(c), PC.A.5.4.2(a) and PC.A.5.4.3
- Where it is the intention of the User to make the new technology (for example: BESS) part of any existing PPM, this would constitute a modification or control system change of the existing PPM and would invoke the modelling requirements of PC.A.9 in accordance with PC.A.5.4.2

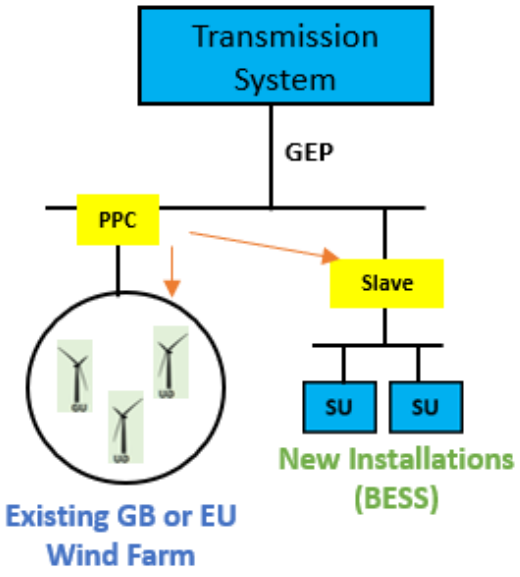

Example:

User decides to add new BESS behind an existing Grid Entry Point, such that the existing PPC controls the voltage performance of both the existing and new generators. Since the PPC would be modified in this case, the PPM shall be caught by the modelling requirements of PC.A.9

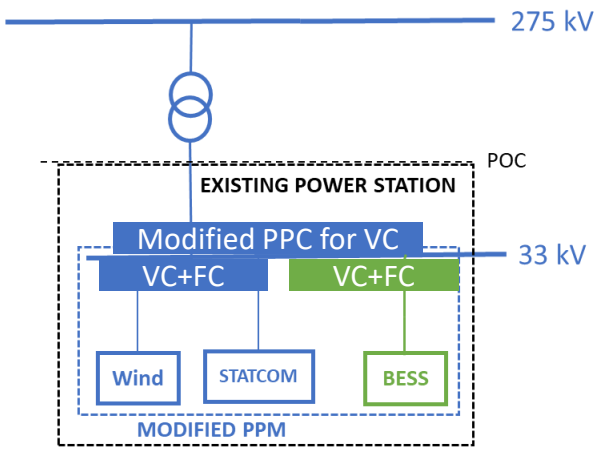

*: This guidance is subject to change, as it depends on the outcome of Grid Code modification GC0168

NESO National Energy System Operator

Modelling Requirements for Co-located Sites

PPM Definition:

Grid Code Definition:

- A collection of **Non-Synchronous Generating Units** that are powered by an **Intermittent Power Source** or connected through power electronic conversion technology or **Non-Synchronous Electricity Storage Units**, joined together by a **System** (registered as a **Power Park Module** under the PC) with a single electrical point of connection directly to the **Onshore Transmission System** (or **User System** if **Embedded**) with no intermediate **Offshore Transmission System** connections

To simplify:

- A group of one or more Non-Synchronous Power Generating Unit(s) that can be independently controlled for both frequency and voltage and has an-isolation facility to enable independent operation and testing and a single electrical connection to the transmission network which may be shared with electrically adjacent Generators.

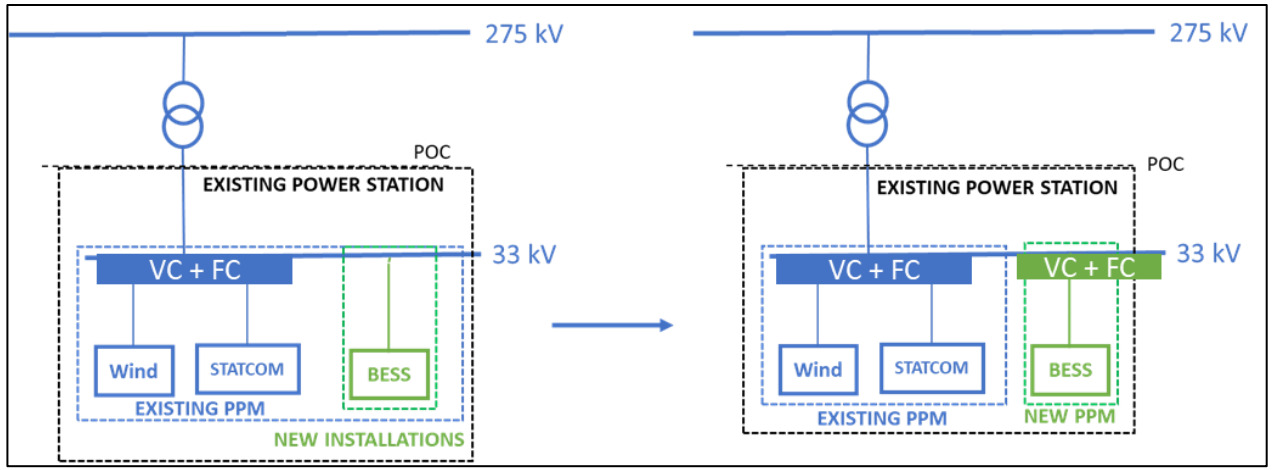

VC: Voltage Controller
FC: Frequency Controller

NESO National Energy System Operator

Grid Code Modification Proposal

Extension of user model submission for Analysis & Modelling to support operationally critical system for ENCC.

NESO
National Energy System Operator

Issue

NESO Analysis & Modelling (A&M) require RMS models to allow them to create operationally critical dynamic models in the Online Stability Assessor (OSA) tool for ENCC.

Currently the grid code states "*Unless specified otherwise in the Bilateral Agreement, RMS models must be submitted at least 3 months prior to date requested for issue of the Interim Operational Notification*"

PowerTech (vendor for OSA), require a RMS model 5 months ahead of commissioning date to supply a suitable dynamic model for OSA.

This current timeline introduces a need for the ENCC to operate the power system inefficiently.

Under these conditions, the decisions taken in operations will be conservative, resulting in higher balancing costs .

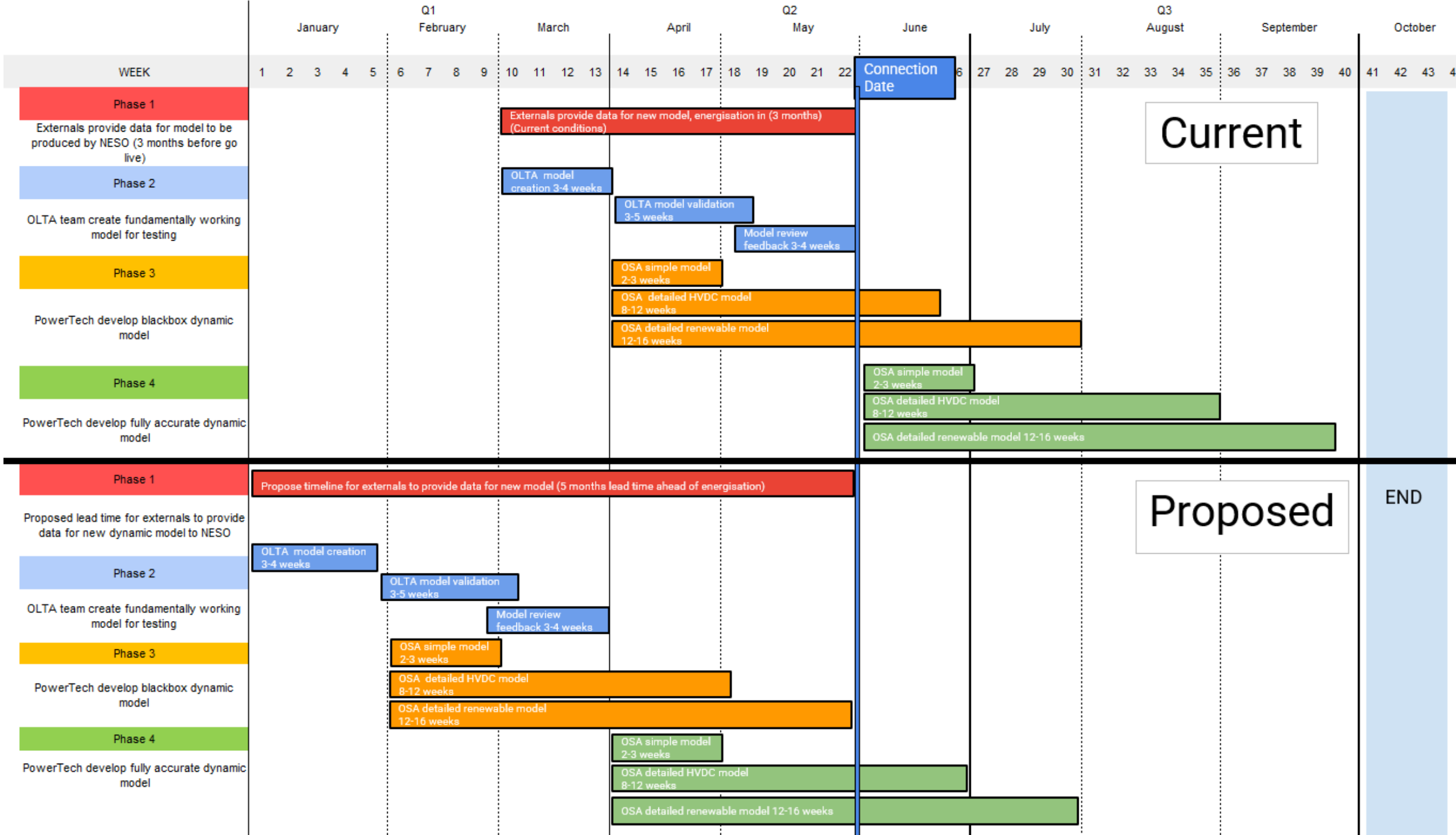
Q1
Q2
Q3
January
February
March
April
May
June
July
August
September
October
WEEK
1 2 3 4 5 6 7 8 9 10 11 12 13 14 15 16 17 18 19 20 21 22 6 27 28 29 30 31 32 33 34 35 36 37 38 39 40 41 42 43 4
Connection Date
Current
Phase 1
Externals provide data for model to be produced by NESO (3 months before go live)
Externals provide data for new model, energisation in (3 months) (Current conditions)
Phase 2
OLTA team create fundamentally working model for testing
OLTA model creation 3-4 weeks
OLTA model validation 3-5 weeks
Model review feedback 3-4 weeks
Phase 3
PowerTech develop blackbox dynamic model
OSA simple model 2-3 weeks
OSA detailed HVDC model 8-12 weeks
OSA detailed renewable model 12-16 weeks
Phase 4
PowerTech develop fully accurate dynamic model
OSA simple model 2-3 weeks
OSA detailed HVDC model 8-12 weeks
OSA detailed renewable model 12-16 weeks
Proposed
END
Phase 1
Proposed lead time for externals to provide data for new dynamic model to NESO
Propose timeline for externals to provide data for new model (5 months lead time ahead of energisation)
Phase 2
OLTA team create fundamentally working model for testing
OLTA model creation 3-4 weeks
OLTA model validation 3-5 weeks
Model review feedback 3-4 weeks
Phase 3
PowerTech develop blackbox dynamic model
OSA simple model 2-3 weeks
OSA detailed HVDC model 8-12 weeks
OSA detailed renewable model 12-16 weeks
Phase 4
PowerTech develop fully accurate dynamic model
OSA simple model 2-3 weeks
OSA detailed HVDC model 8-12 weeks
OSA detailed renewable model 12-16 weeks

Proposed solution

A minor change to Grid Code; the RMS/EMT model supplied should be provided 5 months before the EON/ION rather than the current 3 months.

Draft Legal Text

PC.A.9.6.1.4 The User shall notify The Company of any changes to RMS models in accordance with PC.A.1.2. Unless specified otherwise in the Bilateral Agreement, RMS models must be submitted:

(i) at least 5 months prior to date requested for issue of the Interim Operational Notification

PC.A.9.6.2.5 The User shall notify The Company of any changes to EMT models in accordance with PC.A.1.2. Unless specified otherwise in the Bilateral Agreement, EMT models must be submitted:

(i) at least 5 months prior to date requested for issue of the Interim Operational Notification

Impact

The modification is expected to have a positive impact on

1. NESO ENCC operating efficiently
2. NESO Analysis & Modelling by improving accuracy
3. NESO requirements to operate within acceptable voltage limits as stated by the SQSS:
   - *A voltage condition is unacceptable in operational timescales if:*
     - *6.6.1. there is any inability to achieve pre-fault steady-state voltages as specified in Table 6.3 at onshore & offshore transmission system substations or GSPs*

No negative impacts have been identified.

We are proposing that this is raised as a self-governance modification that will proceed directly to Code Administrator Consultation

NESO National Energy System Operator

Public

Obligatory Reactive Power Service (ORPS) methodology review

NESO
National Energy System Operator

ORPS methodology review

What is Obligatory Reactive Power Service (ORPS)

- To assist with voltage support, generators are required as per Grid Code CC.6.3.2 or ECC.6.3.2 to generate or absorb reactive power within certain limits. Grid Code CC.8.1 Part I and Grid Code ECC.8.1 Part I define the requirement to have a Mandatory Service Agreement (MSA) which includes the requirement of reactive power provision.
- For providing this mandatory capability, providers are remunerated through the Obligatory Reactive Power Service (ORPS) default payment mechanism, as outlined in the CUSC schedule 3, part 1, appendix 1.
- There have been significant changes in the energy landscape. In GB, all coal fired power stations are no longer running, there has been a reduction in gas, and an increase in renewables and intermittent energy generators as we move to net-zero.
- The default payment mechanism is based on gas prices and this hasn't changed since 2007.
- We recognise that the methodology requires review.
- There is also the Enhanced Reactive Power Service (ERPS). This hasn't been bid in to for many years. (ERPS is not within the scope of the project but is impacted by ORPS)

NESO National Energy System Operator

ORPS methodology review

Approach

- The project approach will be to review the costs for present and emerging technologies providing mandatory reactive power. There have been 11 potential technologies identified.
- Innovation project funding has been secured and a 3rd party appointed to support the review of the remuneration calculation.
- We will be seeking input from industry participants on what works and what doesn’t, as a key part of the project’s inputs.
- The project will keep participants informed as the work develops with its outputs.

ORPS methodology review

Scope and outputs

- The project is due to kick-off in the next few weeks and is forecasted to last for approximately 7-8 months.
- We will be arranging industry work groups etc, to validate current assumptions and generate ideas which help shape the solution.
- As part of the work, we will identify a revised remuneration methodology that is both fair and transparent.
- The key outputs will be:
  - A recommended approach for remunerating mandatory reactive power services.
  - An assessment of any codes and systems that are impacted by the recommended approach.
- It is worth noting that the project's focus is on proposing what changes are required. Whether and how the change will be delivered will be by the BAU code change process.

NESO National Energy System Operator

ORPS methodology review

Reason for comms

- We have come to GCDF to raise awareness of the project. If the Grid Code is impacted by the output of the project, we will return to the GCDF to update the group as appropriate with the aim of raising a formal modification through the Grid Code Governance process.
- If you would like to register your interest in project comms and updates or share your thoughts on the technologies the project should consider, please do so by contacting Innovation@nationalenergyso.com.

NESO National Energy System Operator

AOB

NESO
National Energy System Operator